ALPHA LUCE

COUPE DE PROFILÉS

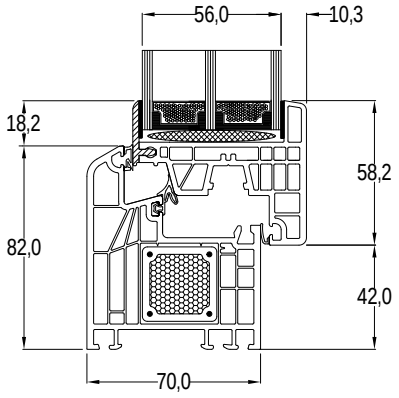

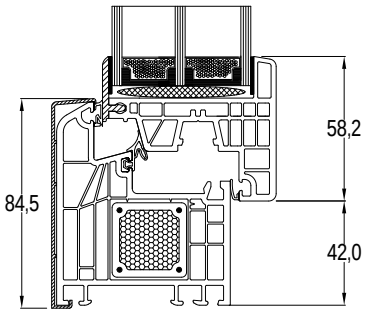

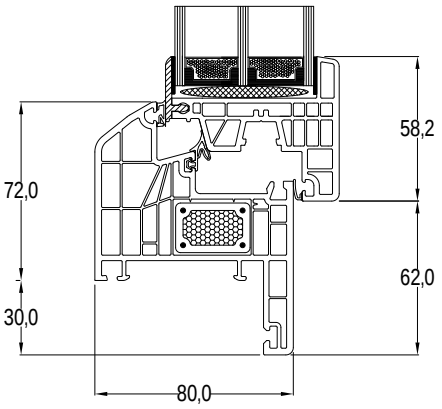

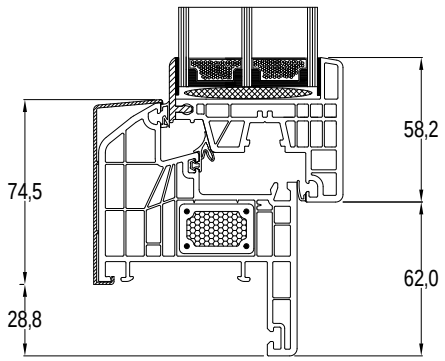

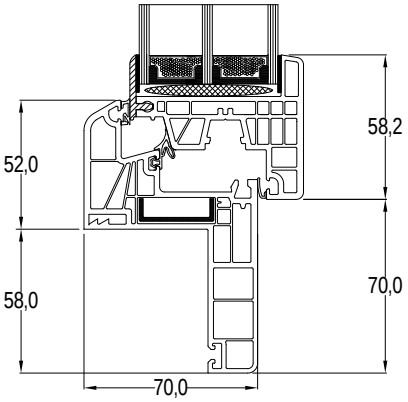

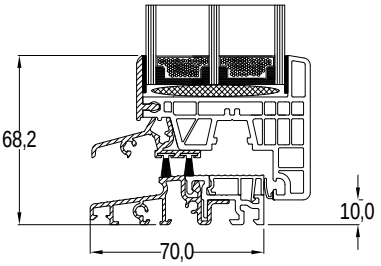

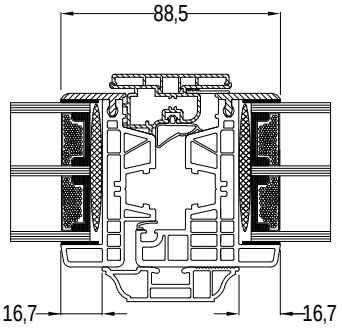

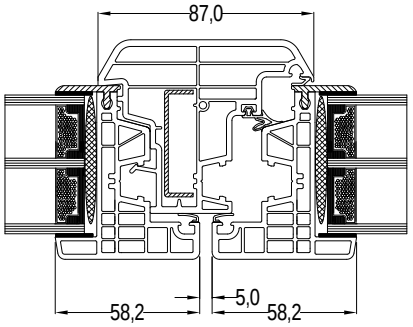

ALPHACAN
INNOVATIVE PROFILES & SOLUTIONS