HST VISION

CUTTING PLAN

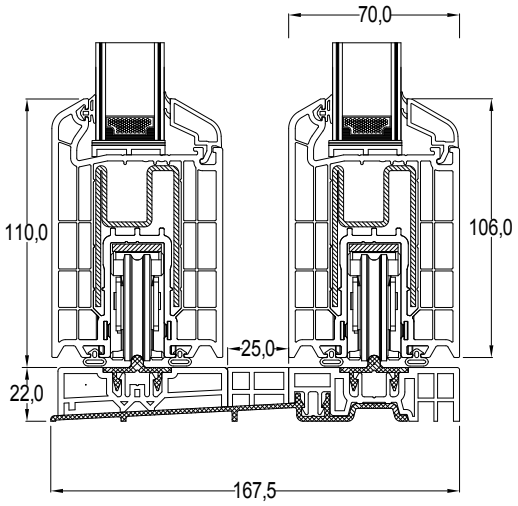

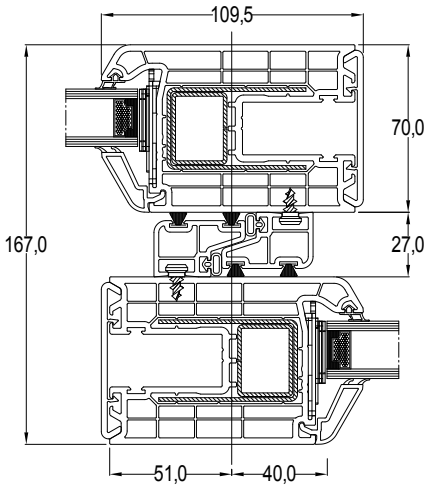

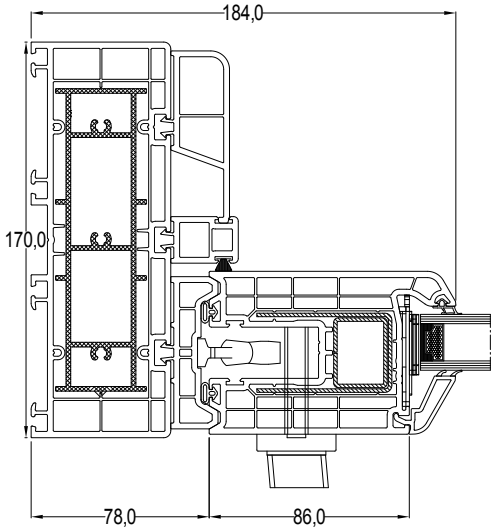

ALPHACAN
INNOVATIVE PROFILES & SOLUTIONS